QTi DALI 1X14/24 DIM

QUICKTRONIC INTELLIGENT DALI DIM T5 | ECG dimmable DALI for FL 16 mm

Areas of application

- Suitable for use in emergency lighting systems as per EN 50172/DIN VDE 0108-100
- Installation in emergency lighting systems according to IEC 61347-2-3, appendix J
- Industry
- Open-plan offices, corridors and storage rooms
- Public buildings
- Sports halls and factories
- Strip lighting
- Shop lighting
- Suitable for luminaires of protection class I

Product benefits

- System+ Guarantee available
- Easy integration in luminaire thanks to same dimensions like DALI GI ECG
- TouchDIM function for easy and inexpensive dimming of several ECGs
- Same luminous flux with direct and alternating current
- Dimming of amalgam lamps without flickering or reduced lifespan
- Automatic restart after lamp replacement
- No new approvals required

DALI product features

- Control via the DALI interface
- Compliance with the DALI standard to IEC 60929 and IEC 62386
- Control input protected against overvoltage and polarity reversal (OSRAM ECG)

Touch DIM and Touch DIM Sensor function

- Manual dimming without controller and with standard switches
- Including memory function (double click) and soft start

Product features

-

© 2016, OSRAM GmbH. All rights reserved.

Corridor function for direct connection of ECG to common motion sensor
- Corridor function with pre-programmed light program
- Touch DIM function for free parameterization of light value and turn on time
- Fit for SMART GRID for feedback of consumed mains power and lamp operating hours
- Fit for Emergency function for automatic detection of emergency lighting by ECG
- Very low standby power consumption: < 0.2 W (A1 BAT)
- Lifetime: > 100,000 h (for T = 65 °C at T_C)
- Very high number of switching cycles: up to 300,000
- Dimming range: 1...100 % (3...100 % with compact fluorescent lamp)
- POWER2LAMP function for optimal matching of ECG power to lamp during lamp lifetime
- Line frequency: 0 Hz, 50...60 Hz, rectified AC

© 2016, OSRAM GmbH. All rights reserved.

Technical data

Electrical data

Input voltage AC	198...264 V
Nominal voltage	220...240 V
Mains frequency	50...60 Hz
Input voltage DC	154...276 V
Operating frequency	53...120 kHz
Max. ECG no. on circuit breaker 10 A (B)	17 [1)]
Max. ECG no. on circuit breaker 16 A (B)	28 [1)]
Power loss in stand-by mode	0.2 W
Inrush current	24 A

[1)] Type B

Light technical data

Starting time	0.6 s [1)]

[1)] Optimized preheat start

Dimensions & weight

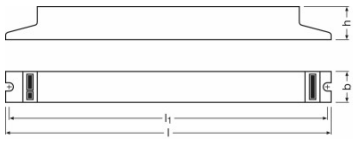

Length	360.0 mm
Width	30.0 mm
Height	21.0 mm
Mounting hole spacing, length	350.0 mm
Product weight	278.00 g
Wire preparation length, input side	8.0...9.0 mm [1)]
Wire preparation length, output side	8.0...9.0 mm [1)]
Cable cross-section, output side	0.5...1.5 / 0.5...1.0 mm² [2)]
Cable cross-section, input side	0.5...1.5 / 0.5...1.0 mm² [2)]

[1)] Combi wiring

[2)] Solid leads / Flexible

© 2016, OSRAM GmbH. All rights reserved.

Temperatures & operating conditions

Ambient temperature range	+10...+50 °C
Permitted rel. humidity during operation	5...85 %

Lifespan

ECG lifetime	100000 h [1]

[1] At tcase = 65°C at tc point / 10 % failure rate

Expected Lifetime

Product name	Lamp group				
ZMP_56694 QTi DALI HE HO FC DUL 1 220-240V	HE 14 W SLS	ECG ambient temperature [ta]	40	50	60
		Temperature at tc-point [°C]	45	55	65
		Lifetime [h]	100000	100000	100000
	HO 24 W CONSTANT	ECG ambient temperature [ta]	40	50	60
		Temperature at tc-point [°C]	45	55	65
		Lifetime [h]	100000	100000	100000

Capabilities

Dimming interface	DALI / Touch DIM / Touch DIM Sensor
Dimming range	1...100 % [1]
Dimmable	Yes
Overload protection	Yes
Overheating protection	Power reduction and switch off at T > 75 °C at the tc point
Suitable for fixtures with prot. class	I
End of lamp life safety shutdown	EOL T.2

[1] Luminous flux

Certificates & standards

Approval marks – approval	VDE / VDE-EMC / ENEC 10 / EL / GOST / RCM / CCC / E1 approval
EEI – Energy Label	A1 BAT
Standards	Acc. to EN 61347-2-3/Acc. to EN 60929/Acc. to EN 55015:2006 + A1:2007/Acc. to EN 61000-3-2/Acc. to EN 61547
Protection class	I
Type of protection	IP20

© 2016, OSRAM GmbH. All rights reserved.

Wiring Diagram

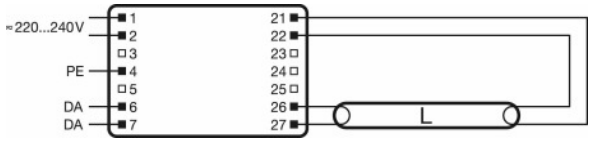

Wiring diagram

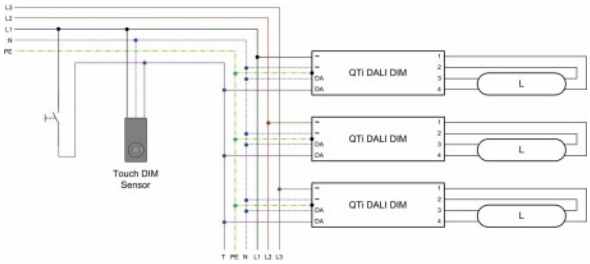

Wiring diagram

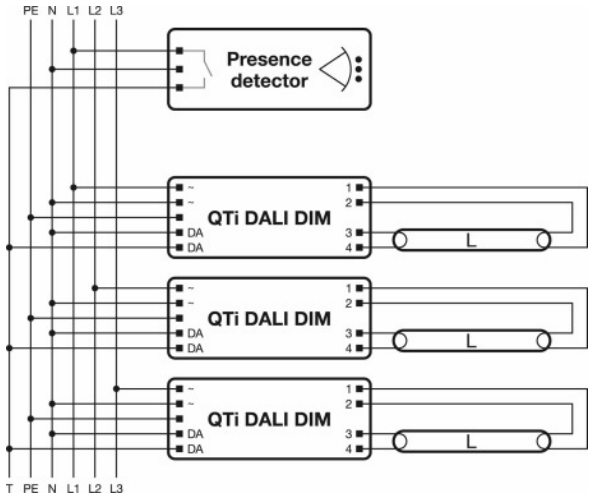

Wiring diagram

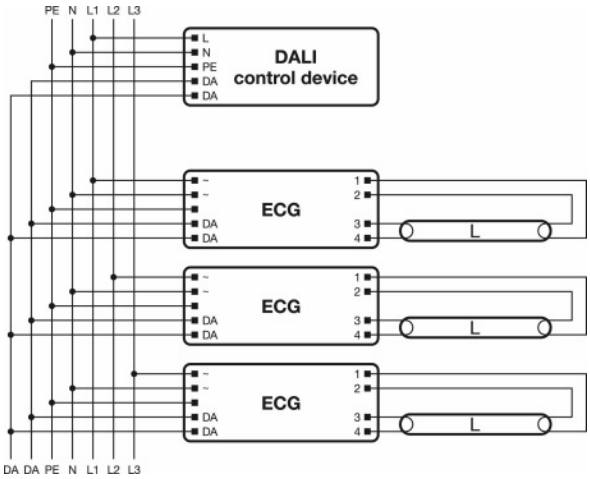

Wiring diagram

Download Data

© 2016, OSRAM GmbH. All rights reserved.

	File
	Addon Technical Information Frequent switching Quicktronic
	Addon Technical Information ECG lifetime - QUICKTRONIC (DALI) DIM
	Brochures Applications and luminaires solutions
	Certificates INOTEC
	Certificates ENECVDE-Marks approval
	Certificates Manufacturer´s declaration Burning-in of fluorescent lamps
	Certificates Manufacturer´s declaration Low stand-by
	Certificates Manufacturer´s declaration EN 55015:2006+A1:2007 (300 MHz)
	Certificates Manufacturer´s declaration LampECG combinations: Frequent switching
	Certificates VDE-EMC-CERTIFICATE QTI DALI DIM
	Certificates EAC certificate for Quicktronics QT
	Declarations of conformity Declaration of conformity
	Installation/Operation notice Technical guide - ECGs for T5-lamps
	Installation/Operation notice Technical application guide QUICKTRONIC Intelligent DALI DIM (GB)
	Operating instructions EAC QTi T5 DALI DIM
	CAD data 3-dim 360x30x21 1881281
	CAD data 3-dim 360x30x21 1881281
	CAD data 3-dim 360x30x21 1881281
	CAD data PDF 360x30x21 1881281

Logistical Data

© 2016, OSRAM GmbH. All rights reserved.

Product code	Product description	Packaging unit (Pieces/Unit)	Dimensions (length x width x height)	Volume	Gross weight
4050300870380	QTi DALI 1X14/24 DIM	Shipping carton box 20	392 mm x 165 mm x 98 mm	6.34 dm^3	5680.00 g

The mentioned product code describes the smallest quantity unit which can be ordered. One shipping unit can contain one or more single products. When placing an order, for the quantity please enter single or multiples of a shipping unit.

References / Links

For more information on the system guarantee and the terms and conditions of the guarantee visit

- www.osram.com/system-guarantee

Disclaimer

Subject to change without notice. Errors and omission excepted. Always make sure to use the most recent release.

© 2016, OSRAM GmbH. All rights reserved.

QTi DALI 1X14/24 DIM

QUICKTRONIC INTELLIGENT DALI DIM T5 | ECG dimmable DALI for FL 16 mm

Product name	Lamp group	Nominal current	Nominal wattage + Power loss	Luminous flux at 35 °C	Number of lighting outlets
ZMP_56694 QTi DALI HE HO FC DUL 1 220-240V	DULUX F 24 W	0.11 A	25.00 W	1700 lm	1
	DULUX L 24 W	0.11 A	25.00 W	1600 lm	1
	FC 22 W	0.11 A	25.00 W	1750 lm	1
	HE 14 W	0.07 A	15.40 W	1200 lm	1
	HE 14 W SLS	0.07 A	15.40 W	1200 lm	1
	HO 24 W	0.11 A	25.30 W	1750 lm	1
	HO 24 W CONSTANT	0.11 A	25.30 W	1900 lm	1

© 2016, OSRAM GmbH. All rights reserved.