QTP-D/E 1X10...13

QUICKTRONIC PROFESSIONAL M | ECG for CFL

Areas of application

- Emergency lighting systems acc. to EN 50172 / DIN VDE 0108-100
- Public buildings
- Sports halls and factories
- Suitable for luminaires of protection class I

Product benefits

- Long lamp life
- No adverse effect from frequent on/off switching
- Automatic restart after lamp replacement
- Perfect lamp start for applications with motion sensors
- Separate installations thanks to optional cable clamp for K2 and K3 casings
- VDE/VDE EMC certified system

Product features

- Supply voltage: 220...240 V
- Line voltage: 198...264 V
- Line frequency: 0 Hz | 50 Hz | 60 Hz
- Lamp start with optimum filament preheating
- Energy Efficiency Index EEI: A2
- Automatic shutdown of defective lamps and at end of life (EoL T.2)
- Lamp operation: to EN 60929
- Safety: to EN 61347-2-3

© 2016, OSRAM GmbH. All rights reserved.

Technical data

Electrical data

Input voltage AC	198...264 V
Nominal voltage	220...240 V
Mains frequency	50...60 Hz
Input voltage DC	176...276 V [1]
Operating frequency	44 kHz [2]
Max. ECG no. on circuit breaker 10 A (B)	25 [3]
Max. ECG no. on circuit breaker 16 A (B)	41 [3]
Inrush current	7 A

[1] Minimum voltage for lamp ignition: 198 V

[2] Approximately

[3] Type B

Light technical data

Starting time	1.0 s

Dimensions & weight

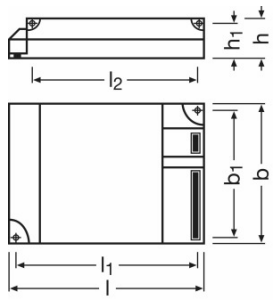

Length	93.0 mm
Width	58.0 mm
Height	29.0 mm
Mounting hole spacing, length	84.0 mm
Mounting hole spacing, width	48.0 mm
Product weight	100.00 g
Cable cross-section, output side	0.5...1.5 mm²
Cable cross-section, input side	0.5...1.5 mm²

Temperatures & operating conditions

© 2016, OSRAM GmbH. All rights reserved.

Ambient temperature range	-20...+50 °C
Permitted rel. humidity during operation	5...85 %

Lifespan

ECG lifetime	50000 h [1)]

[1)] At T_{case} = 75°C at T_c point / 10% failure rate

Additional product data

Product remark	Optional cable clamp, see chapter ECG mountings - cable clamp

Capabilities

Suitable for fixtures with prot. class	I / II
End of lamp life safety shutdown	EOL T.2

Certificates & standards

Approval marks – approval	VDE / VDE-EMC / ENEC 10 / GOST / RCM
EEI – Energy Label	A2
Standards	Acc. to EN 61347-2-3/Acc. to EN 60929/Acc. to EN 55015:2006 + A1:2007/Acc. to EN 61000-3-2/Acc. to EN 61547
Protection class	III

© 2016, OSRAM GmbH. All rights reserved.

Wiring Diagram

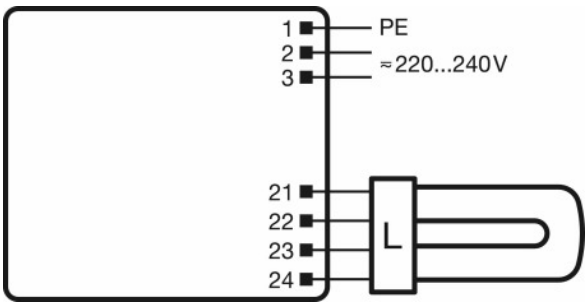

Wiring diagram

Download Data

	File
	Certificates ENEC-Marks approval
	Certificates INOTEC
	Certificates Manufacturer´s declaration LampECG combinations: Frequent switching
	Certificates VDE-EMC-Certificate QTP DL_TE
	Declarations of conformity CE conformity
	Operating instructions EAC QTP-DE + QTP-TE
	CAD data 3-dim 93x58x29 9900039
	CAD data 3-dim 93x58x29 9900039
	CAD data 3-dim 93x58x29 9900039
	CAD data PDF 93x58x29 9900039

© 2016, OSRAM GmbH. All rights reserved.

Logistical Data

Product code	Product description	Packaging unit (Pieces/Unit)	Dimensions (length x width x height)	Volume	Gross weight
4008321181572	QTP-D/E 1X10...13	Shipping carton box 20	315 mm x 66 mm x 196 mm	4.07 dm^3	2127.00 g

The mentioned product code describes the smallest quantity unit which can be ordered. One shipping unit can contain one or more single products. When placing an order, for the quantity please enter single or multiples of a shipping unit.

Disclaimer

Subject to change without notice. Errors and omission excepted. Always make sure to use the most recent release.

© 2016, OSRAM GmbH. All rights reserved.

QTP-D/E 1X10...13

QUICKTRONIC PROFESSIONAL M | ECG for CFL

Product name	Lamp group	Nominal current	Nominal wattage + Power loss	Luminous flux at 25 °C	Number of lighting outlets
QTP-D/E 1X10...13	DULUX D/E 10 W	0.05 A	12.00 W	600 lm	1
	DULUX D/E 13 W	0.07 A	15.00 W	900 lm	1
	DULUX S/E 11 W	0.06 A	14.00 W	900 lm	1
	DULUX S/E 9 W	0.05 A	9.50 W	600 lm	1
	DULUX T/E 13 W	0.07 A	15.00 W	900 lm	1

© 2016, OSRAM GmbH. All rights reserved.